常 州 多 密 特 密 封 科 技 有 限 公 司

Changzhou DOMT Sealing Technology Co., Ltd.

Brief Introduction 公司简介

常州多密特密封科技有限公司于 2017年1月份成立，公司坐落于江苏常州，是一家专注于制造密封件的创新型企业，集研发、生产、销售和服务于一体。公司目前有180人，包含15名具备丰富研发，制造以及质量管理的技术人员。公司按照国际领先的技术进行设计，拥有先进的整套密封件生产 线，产品品质达到国内外同类产品领先水平。

Changzhou DOMT Sealing Technology Co., Ltd. was established in January 2017 and is located in Changzhou, Jiangsu. It is an innovative enterprise focused on manufacturing seals, integrating research and development, production, sales, and service. Currently the company has 180 employees, including 15 technical personnel with rich research and development, manufacturing, and quality management skills. The company designs according to leading international technology and has an advanced complete set of seal production lines, with product quality reaching the leading level of similar products at home and abroad.

Brief Introduction 公司简介

- 公司建立了多密特密封件研发中心，专注于产品的研发和创新，先后申请并获得一百多项国家专利，如：变速箱用油封、汽车轮毂油封、电机用组合油封、新能源汽车电机轴密封，一体式发热盘油封，料理机和榨汁机油封，搅拌机密封用连接装置，用于豆浆机的密封结构等，以及一种多唇口旋转油封的密封性测试装置、聚四氟乙烯油封模具， 一种便于脱模的油封模具，一种油封耐磨性试验装置，一种油封修边装置等发明专利。

The company has established a DOMT R&D Center of Sealing Parts , focusing on product research and innovation. It has applied for and obtained more than 100 National patents, such as gearbox oil seals, automotive hub oil seals, electric motor combination oil seals, new energy vehicle motor shaft seals, seals for integrated heating discs, blenders and juicers and connection device for sealing the blender, and sealing structure for soybean milk machine， as well as invention patents such as seal sealing testing device for multi lip rotating oil seals and PTFE oil seal molds， an oil seal mold for easy demolding, an oil seal wear resistance testing device, and an oil seal trimming device.

Brief Introduction 公司简介

- 公司在2019年实施并通过了ISO9001质量管理体系，为企业的健康发展奠定了良好的基础；公司在2020年通过了国家高新技术企业、江苏省科技型中小企业以及江苏省民营科技企业的认定，为企业的品牌扩大了影响力。多密特将持续强化产品研发与国际化制造品质的核心优势，整合世界范围内各项资源，设计制造出更好的密封产品。
-

The company implemented and passed the ISO9001 quality management system in 2019, laying a solid foundation for the healthy development of the enterprise; In 2020, the company was recognized as a National High-tech Enterprise, a technology-based small and medium-sized enterprise in Jiangsu Province, and a private technology enterprise in Jiangsu Province, expanding its brand influence. DOMT will continue to strengthen its core advantages in product development and international manufacturing quality, integrate various resources worldwide, and design and manufacture better sealing products.

Brief Introduction 公司简介

- 多密特主要从事旋转油封、往复油封、水封、气动和液压密封、O型圈、模压制品的研发、制造、销售及技术服务。多密特的产品广泛应用于汽车、家电、无人机、机器人、 新能源、医疗、石油、石化，国家电网等行业。

DOMT mainly specializes in manufacturing, sales, and technical services of rotating oil seals, reciprocating oil seals, water seals, pneumatic and hydraulic seals, O-rings, and mold pressing product . DOMT's products are widely used in different fields such as automobiles, home appliances, drones, robots, new energy, healthcare, petroleum, petrochemicals, and the State Grid of China.

文化理念 Culture

企业愿景Vision

争做世界一流密封件品牌
Strive to become a world-class seal brand

企业使命Mission

追求卓越，与时俱进
Pursuing excellence and keeping up with the times

企业价值观Value

以品质创造效益，以诚信感动客户Creating efficiency through quality, moving customers with integrity

企业精神Spirit

开拓创新、精益求精
Pioneering and innovating, striving for excellence

经营方针Business Policy

信誉至上、用户第一Reputation First, User First

人才理念Talent concept

有才有能敢展现，有品有德能担当 Talent, courage to show; quality, virtue, and responsibility

质量理念
Quality concept

零差错、零缺陷、做精品Zero errors, zero defects, and making high-quality products

企业作风
Enterprise style

埋头苦干，团结协作；勇于担当，乐于奉献Buried in hard work, united and collaborative; Brave to take responsibility and willing to contribute

合作伙伴 Partnership

大疆創新

CATL
宁德时代

阳光电源
SUNGROW

中国石化
SINOPEC

3irobotix
深圳市杉川机器人有限公司

国家电网公司
STATE GRID
CORPORATION OF CHINA

雷 Leili 利

Lungshield
medical
肺盾医疗

上海白泽医疗器械有限公司
Shanghai Baize Medical Devices Co., Ltd.

合作伙伴 Partnership

Joyoung 九阳

美的 Midea

Bear 小熊·萌家电

enaiter 伊莱特

TCL
创意感动生活
The Creative Life

Galanz 格兰仕

Royalstar 荣事达

CHIGO 志高

水艺 SHUIYI

mi 小米
www.mi.com

知识产权 Intellectual property

序号	发明名称	申请号	申请日	专利类别
1	豆浆机密封	CN202021965517.1	2020-09-09	实用新型
2	一体式发热盘及料理机	CN202022854085.3	2020-12-01	实用新型
3	无骨架电机轴密封	CN201922259789.3	2019-12-16	实用新型
4	板式气弹簧密封	CN201922263168.2	2019-12-16	实用新型
5	气弹簧密封	CN201922263838.0	2019-12-16	实用新型
6	无积渣果汁机密封	CN201921648051.X	2019-09-29	实用新型
7	一种凸唇油封	CN201922460349.4	2019-12-31	实用新型
8	一种油封	CN201922469136.8	2019-12-31	实用新型
9	双骨架减震件模具	CN201921395820.X	2019-08-26	实用新型
10	搅拌机上端面密封	CN201921814456.6	2019-10-25	实用新型
11	冷流道注射橡胶模具	CN201921397752.0	2019-08-26	实用新型
12	多唇口油封模具	CN201921233607.9	2019-08-01	实用新型
13	水封模具	CN201921233555.5	2019-08-01	实用新型
14	模压唇油封模具	CN201921397161.3	2019-08-26	实用新型
15	聚四氟乙烯油封模具	CN201921815751.3	2019-10-25	实用新型
16	组合式电机轴密封	CN201921815067.5	2019-10-25	实用新型
17	搅拌机密封圈	CN201930584806.3	2019-10-25	外观设计

知识产权 Intellectual property

序号	名称	专利号/申请号	申请日期	专利类别
18	聚四氟乙烯油封模具	CN201921237638.1	2019-08-01	实用新型
19	注射型聚四氟乙烯油封模具	CN201921424378.9	2019-08-29	实用新型
20	联轴器减震圈模具	CN201921233606.4	2019-08-01	实用新型
21	注胶型模具结构	CN201921397110.0	2019-08-26	实用新型
22	榨汁机密封件	CN201920671349.6	2019-05-10	实用新型
23	压注模具	CN201920284660.5	2019-03-06	实用新型
24	果汁机上反向密封件	CN201920044231.0	2019-01-10	实用新型
25	易拆装电机轴密封	CN201920361139.7	2019-03-20	实用新型
26	电机轴密封	CN201920361256.3	2019-03-20	实用新型
27	唇尖聚四氟乙烯油封模具	CN201920284659.2	2019-03-06	实用新型
28	聚四氟乙烯油封模具	CN201910705278.1	2019-08-01	发明公布
29	注射型聚四氟乙烯油封模具	CN201910805686.4	2019-08-29	发明公布
30	自带含油轴承电机轴密封	CN201920058089.5	2019-01-14	实用新型
31	无骨架型密封	CN201920058105.0	2019-01-14	实用新型
32	燃气灶密封圈	CN201920045938.3	2019-01-11	实用新型
33	电机轴密封及密封套装置	CN201920045940.0	2019-01-11	实用新型
34	搅拌机密封	CN201920045939.8	2019-01-11	实用新型

知识产权 Intellectual property

序号	名称	专利号/申请号	申请日期	专利类别
35	多唇口电机轴密封	CN201920361223.9	2019-03-20	实用新型
36	无积渣电机轴密封及密封套装置	CN201920044205.8	2019-01-10	实用新型
37	破壁料理机密封	CN201920044204.3	2019-01-10	实用新型
38	高偏摆多唇口电机轴密封	CN201821415596.1	2018-08-30	实用新型
39	刀座轴连接机构	CN201820752313.6	2018-05-16	实用新型
40	胶料挤出预成型结构	CN201820733325.4	2018-05-16	实用新型
41	包装箱（油封）	CN201830223816.X	2018-05-16	外观设计

主要产品 Key Products

01 气弹簧油封Seals for Gas Spring

★核心技术Core Tech.:
1、采用L型气弹簧骨架油封
2、新型材料的应用
3、密封导向技术的研发
4、无弹簧结构设计

1. Using L-shaped gas spring skeleton oil seal
2. Application of New Materials
3. Research and development of sealing guidance technology
4. Spring free structural design

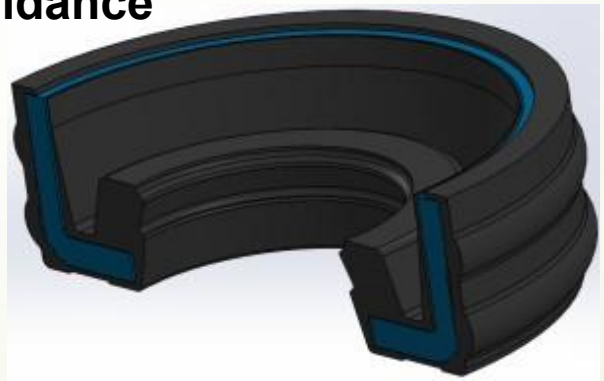

主要产品 Key Products

02 电机轴封 Motor shaft oil seal

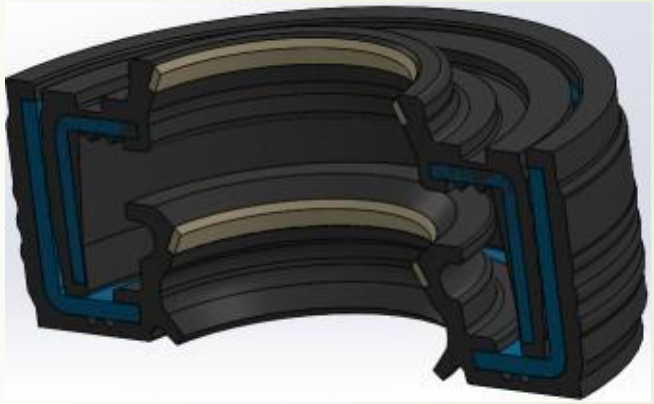

★核心技术 Core Tech.：
1. 主唇口采用耐磨损的聚四氟乙烯
2. 自带弹性密封体的电机轴密封的设计
3. 氟胶，混炼胶的耐磨配方的优化

1.The main lip is made of wear-resistant PTFE
2. Design of motor shaft seal with built-in elastic sealing body
3. Optimization of Wear Resistance Formula for fluorine rubber and mixed rubber

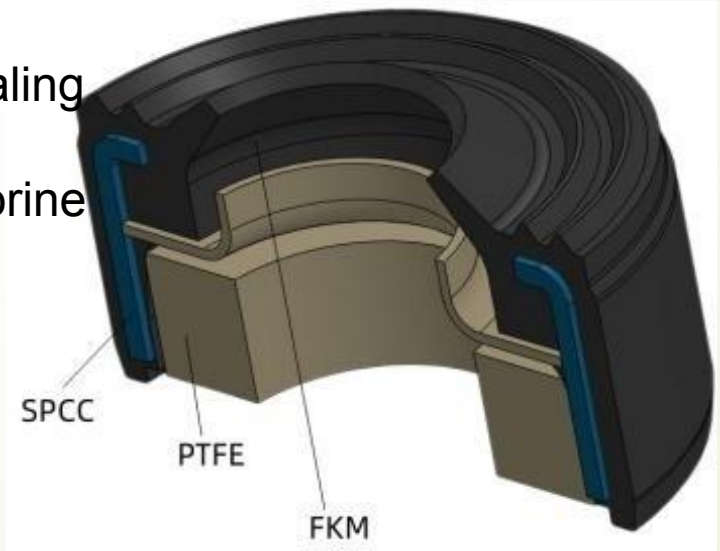

主要产品 Key Products

03

减振油封Shock absorbing oil seal

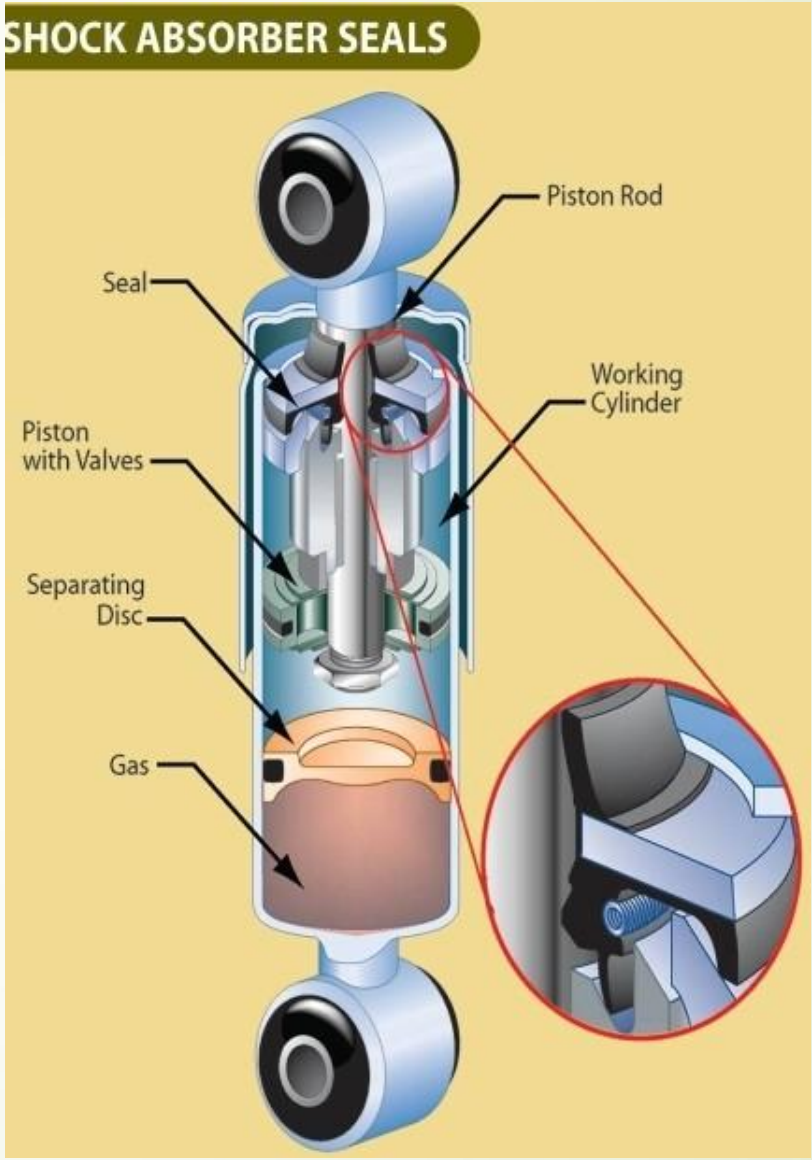

主要产品 Key Products

04 旋转油封 Rotating oil sealing

★径向旋转轴密封件主要为各类型旋转轴提供良好的密封，防止油、水、化学物质等产生泄漏问题，同时防止灰尘、 泥水等污物进入机器内部，延长使用寿 命。

★ Radial rotating shaft seals mainly provide good sealing for various types of rotating shafts, preventing leakage problems caused by oil, water, chemicals, etc. At the same time, they prevent dirt such as dust and mud from entering the interior of the machine, extending its service life.

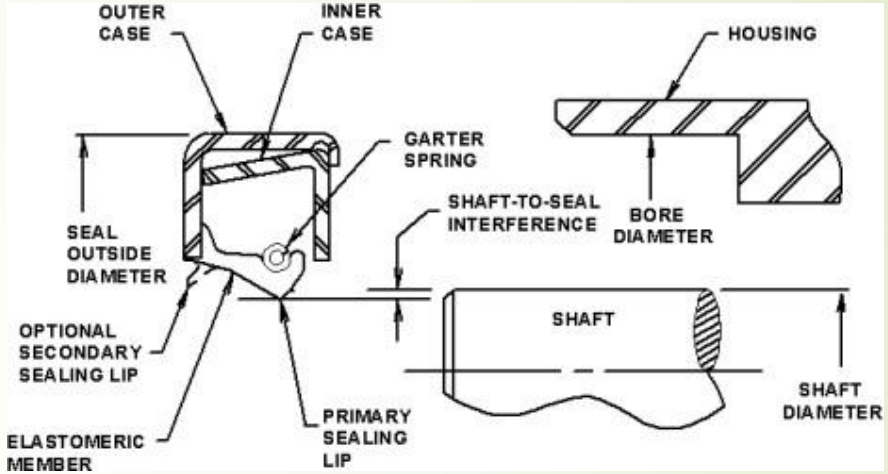

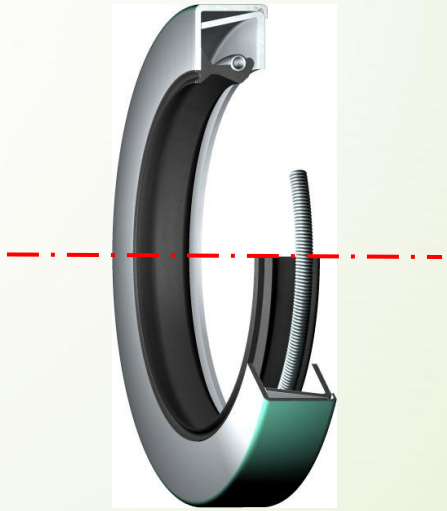

主要产品 Key Products

05 轴承/轮毂油封 Bearing/Hub oil seals

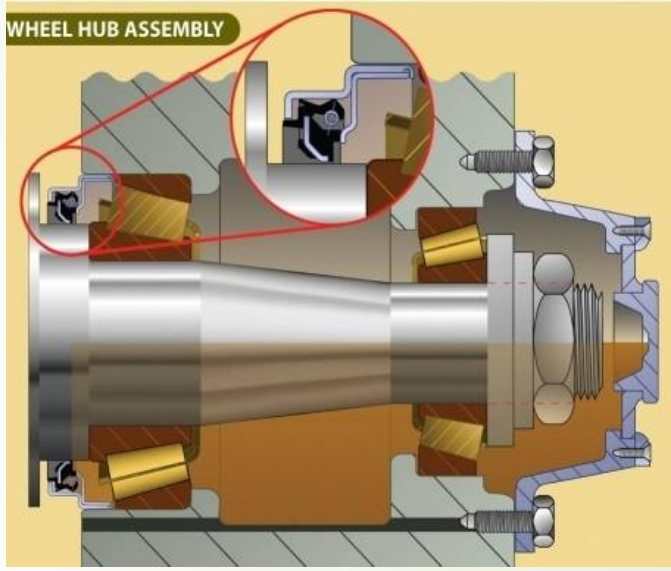

SCOTSEAL组合产品结构挡泥水和灰尘效果好，密封效果佳，使用寿命长，适用 于重型卡车或拖车轮毂密封，免维护。

The SCOTSEAL combination product structure has good mud water and dust blocking effects, excellent sealing effect, and long service life. It is suitable for sealing the wheel hub of heavy-duty trucks or trailers, and is maintenance free

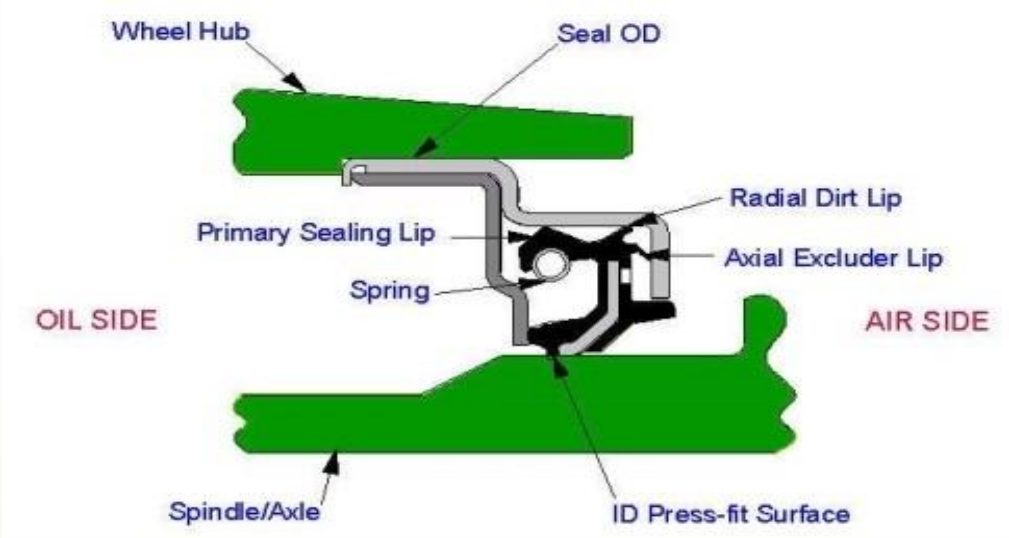

主要产品 Key Products

06

阀座密封件Valve seat seal

★输送天然气阀门上使用，压力高，使用寿命长，泄漏要求极高
Used on natural gas transmission valves, with high pressure, long service life, and extremely high leakage requirements.

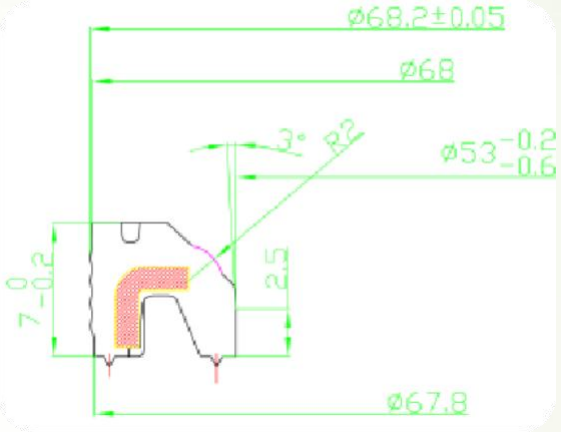

产品示意图
Illustration

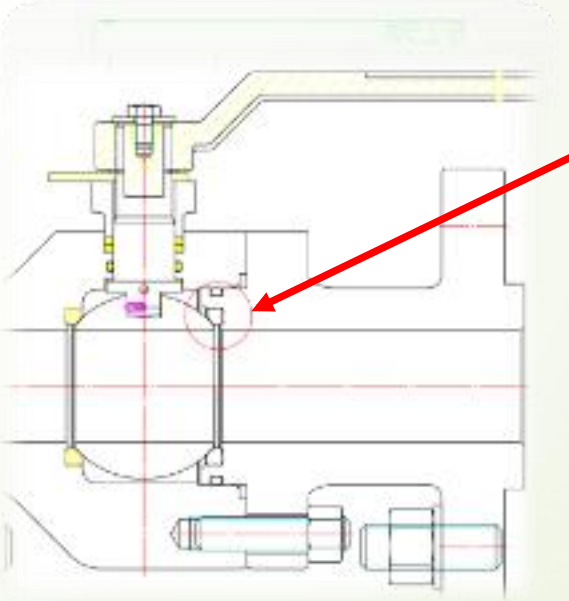

使用场所
Place of use

主要产品 Key Products

07 气门油封 Valve stem seal

★气门组各组件均直接影响到配气系统的密封性及机械性能。如果错装，漏装或者安装不到位，均会直接导致发动机漏油。

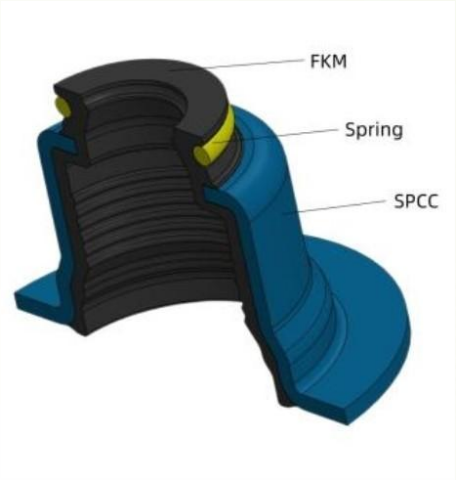

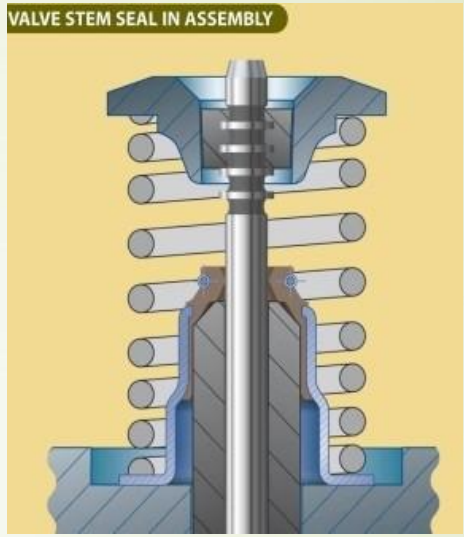

Each component of the valve group directly affects the sealing and mechanical performance of air distribution system. If installed incorrectly, missed or improperly, it can directly lead to engine oil leakage.

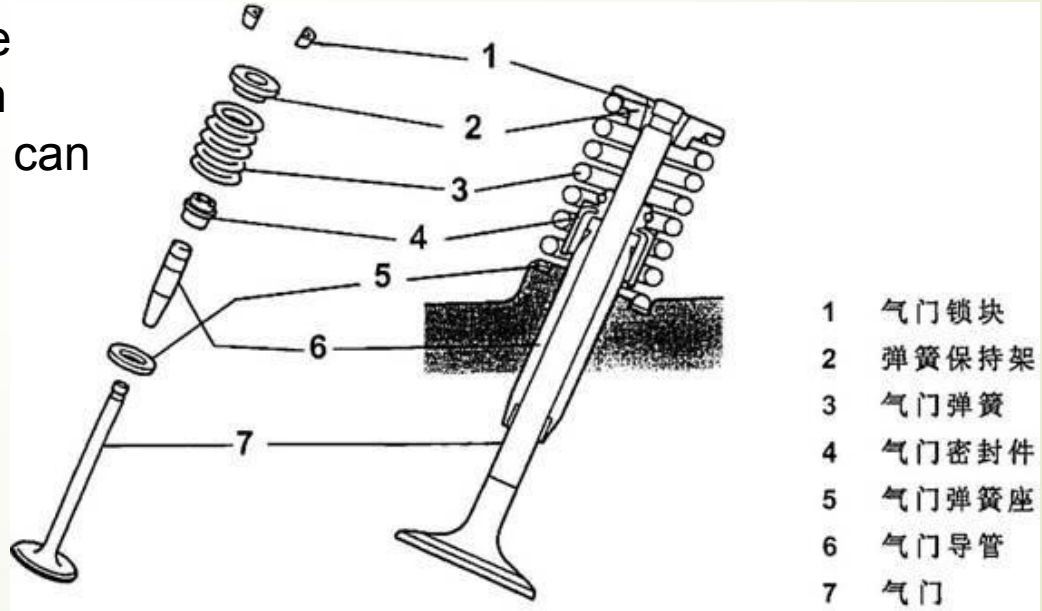

主要产品 Key Products

08 洗衣机等家用电器 House Appliance like Washing Machine etc.

★全自动洗衣机在脱水过程中常因衣物偏置而产生较大震动，这样脱水轴和密封座微小偏心误差也会引起早期漏水，更何况脱水轴转速相对较高，因此设计密封件时要采取特制结构型式。

1、采用多重密封唇，增大油脂充填空间

2、唇部的形状跟随性要好

3、橡胶材质应满足耐磨损、耐热、耐寒耐水耐洗涤剂和耐老化等多种要求

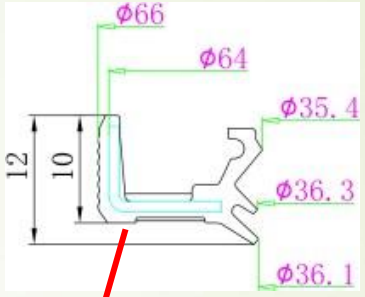

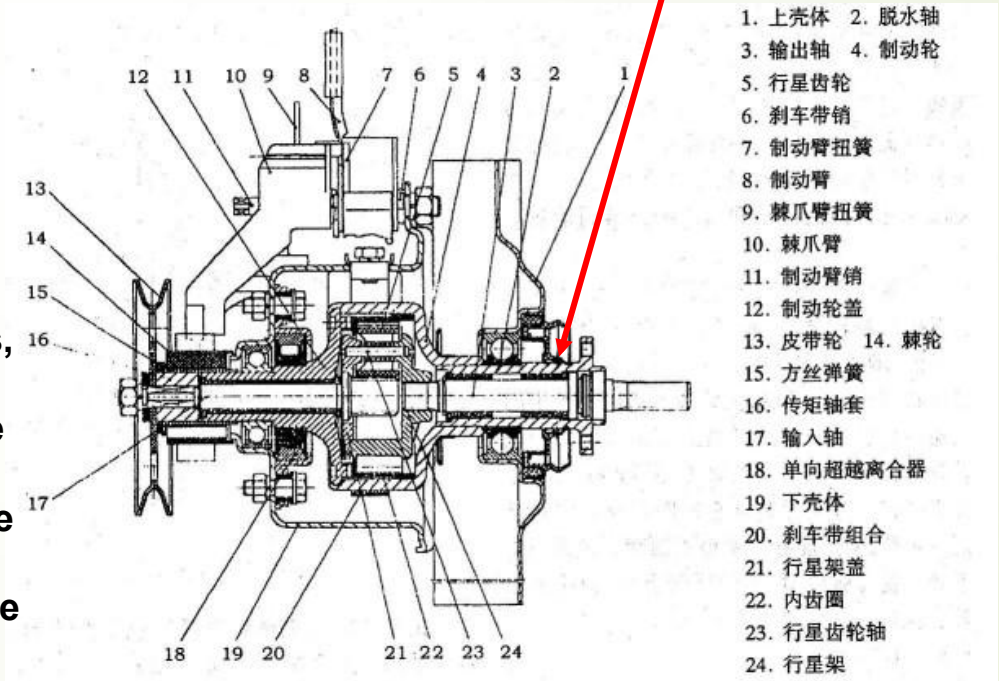

★ Fully automatic washing machines often generate large vibration due to clothing bias during the dehydration process, such small eccentricity errors between the dewatering shaft and sealing seat can also cause early water leakage, let alone the relatively high speed of the dewatering shaft. Therefore, when designing sealing components, a special structural type should be adopted.

1. Using multiple sealing lips to increase grease filling space

2. The shape of the lips follows well

3. The rubber material should meet the requirements of wear resistance, heat resistance, cold resistance, water resistance, and detergent resistance, and various requirements such as aging resistance.

应用领域 Fields Applied

01 家用电器 House Appliance

应用领域 Fields Applied

02

汽车行业 Auomotive

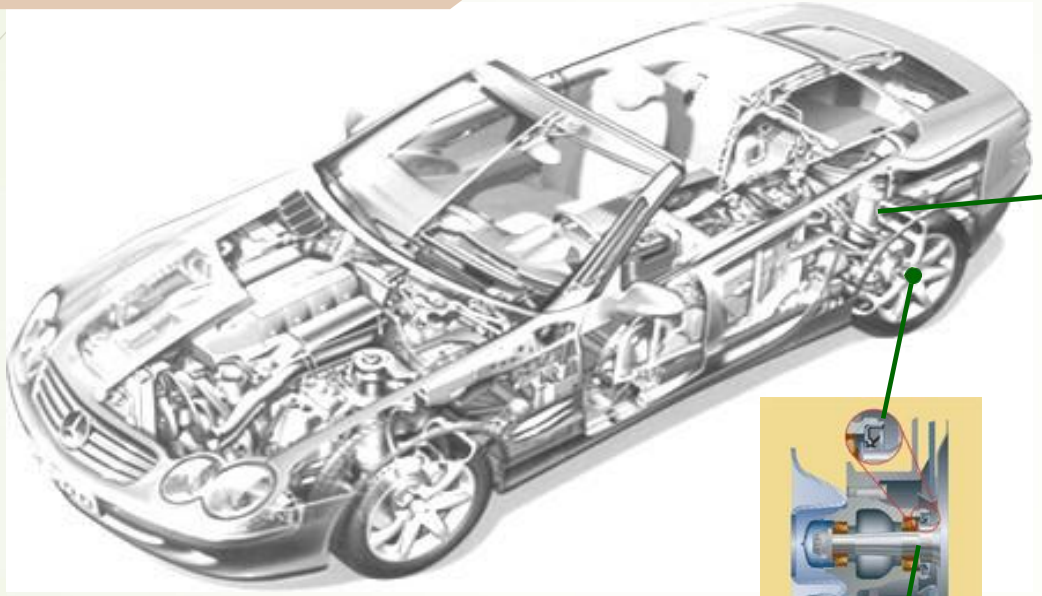

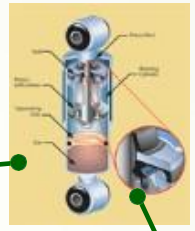

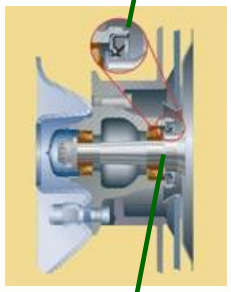

减震器油封 Shock Absorber Seal

轮毂油封 Wheel hub Seal

应用领域 Fields Applied

03

新能源 New Energy

太阳能跟踪器，出口欧美市场
Solar tracker, exported to European and American markets

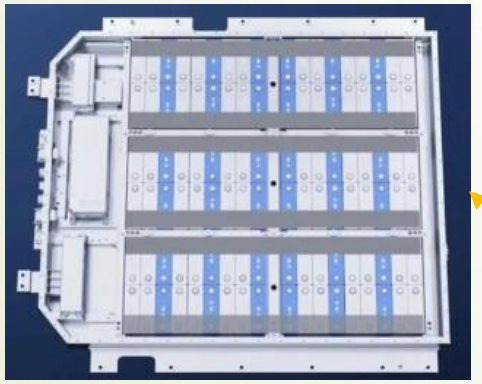

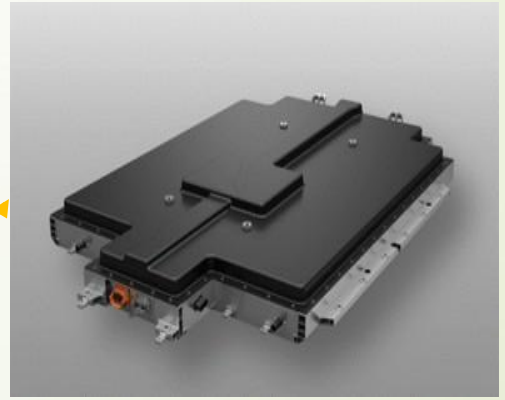

宁德时代（下一代锂电池）
Ningde Era (Next Generation Lithium Battery

应用领域 Fields Applied

04

机器人 Robot

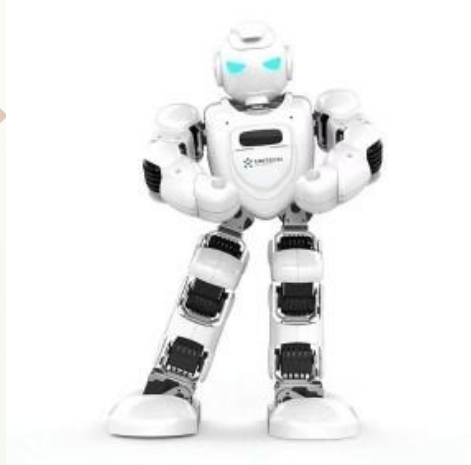

应用领域 Fields Applied

05 无人机领域 Drone

高速旋转耐磨型密封件
High speed rotating wear-resistant seals

植保无人机（农用）有承重要求Plant protection drones (agricultural) with load-bearing requirements

应用领域 Fields Applied

06 阀门、天然气管道 Valves, natural gas pipelines

应用领域 Fields Applied

07

国家电网 State Grid

技术力量 Technical Force

金其超Mr. Jin

常务副总，高级工程师，本科 学历，曾担任无锡恩福油封有 限公司生产科长，斯凯孚密封系统有限公司生产部长。
VGM, Senior Engineer, Bachelor Degree, Previously as Production supervisor in Wuxi Enfu Oil Seal Co., Ltd., Production Manager in SKF sealing system.

邹云Mr. Zou

技术总监，本科学历，毕业 于重庆大学，专业为高分子材料与工程， 曾任职于无锡恩福、重庆杜克、惠州麦华。
Technical Director, Bachelpr Degree, graduated in Chongqing University, major in polymer materials and engineering, and have worked in Wuxi Enfu, Chongqing Duke, and Huizhou Maihua before

汝云飞Mr. Ru

工艺工程师，本科学历，毕 业于桂林理工大学，专业为 机械设计制造及自动化。
ProcessEngineer,Bachelor degree, graduated from Guilin UniversityofTechnology, major in mechanical design, manufacturing,and automation.

潘敏Ms. Pan

销售内勤，本科学历，毕业于桂林理工大学，专业为高分子材料与工程。
Internal Service for sales, Bachelor degree, graduated from Guilin University of Technology, major in Polymer Materials and Engineering.

宋部长Mr. Song

质量部经理，本科学历，毕业于青岛科技大学，专业为高分子材料科学与工程。Quality Manager, Bachelor's degree, graduated from Qingdao University of Science and Technology, major in Polymer Materials Science and Engineering.

研发 R& D

01

产品研发Product R&D

我们的设计软件是 AutoCAD and PROE，能够为客户提供个性化设计服务、有限元分析，按照客户要求定制设计开发新产品。Our design software is AutoCAD and PROE, which can provide personalized design services, finite element analysis, and customized design and development of new products according to customer requirements.

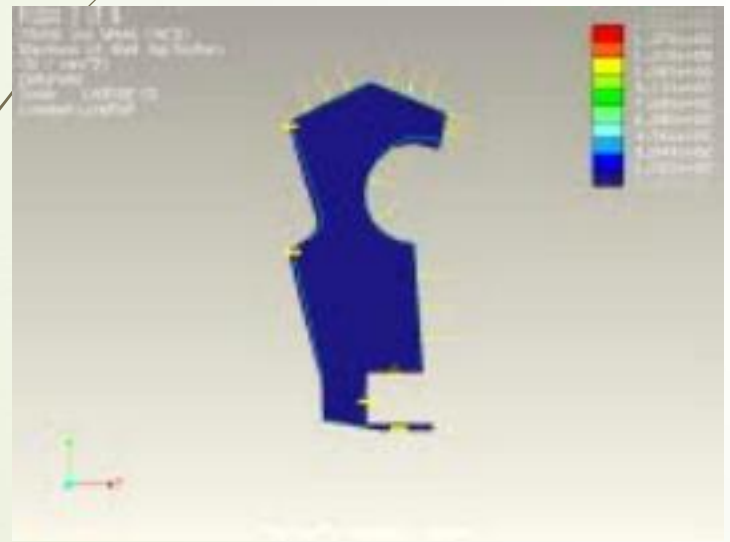

Finite Element Analysis (FEA)

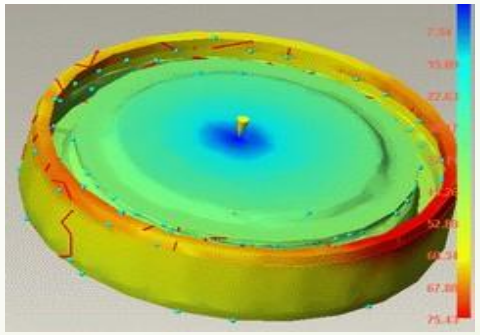

Mold Flow Analysis (MFA)

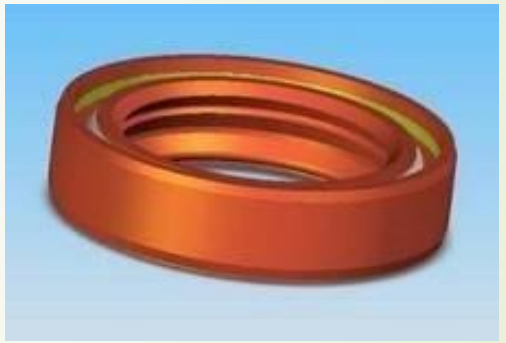

Pro/E

研发 R& D

02 材料研发 Material R&D

我司与高校建立了长期的产学研合作关系，拥有稳定的高素质专业人才队伍，拥有青岛科技大学、常州理工大学的技术支持。**Our company has established a long-term cooperative relationship with universities, with a stable team of high-quality professional talents and technical support from Qingdao University of Science and Technology and Changzhou University of Technology.**

橡胶材料 Material Catagory

- 丁腈橡胶（NBR）
- 丙烯酸酯橡胶（ACM）
- 乙烯一丙烯酸酯橡胶（AEM）
- 硅橡胶（MVQ）
- 氟橡胶（FKM）
- 氢化丁腈橡胶（HNBR）
- 三元乙丙橡胶（EPDM）
- 聚四氟乙烯（PTFE）

生产设备 Production Equipment

硫化机
Vulcanizing machine

二段硫化箱Secondary vulcanization box

油封修整机Trimming machine

自动套簧机Automatic spring assembly machine

开炼机Open Mill

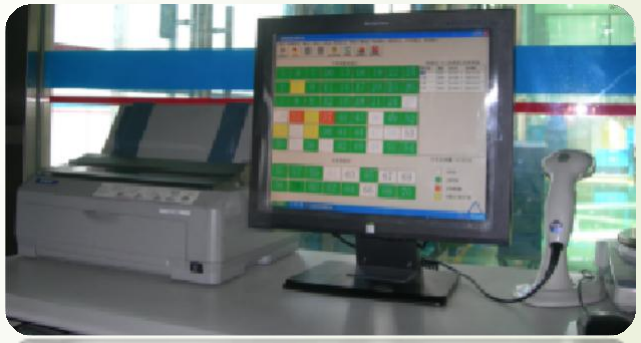

电脑控制橡胶库Computer controlled ata base of rubber

检验设备 Inspection & Test Equipment

影像测量仪Image measuring instrument

油封唇口径向力测定仪
lip diameter axial force tester

检测室 Test Lab

外观检验室
Appearance Inspection

硫化成型车间一角
A corner of the vulcanization molding workshop

检验设备 Inspection & Test Equipment

门尼粘度仪Mooney Viscometer
无转子硫化仪Rotorless vulcanizer

橡胶拉力试验机 Rubber tensile testing machine

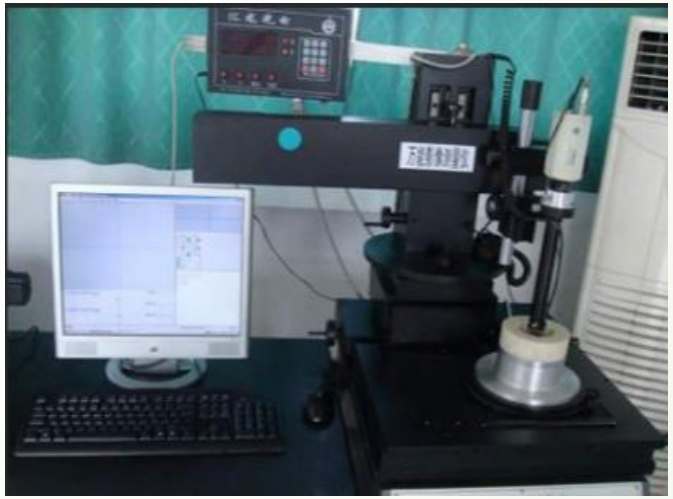

回流纹检测仪
Reflow pattern detector

耐臭氧老化箱
Ozone resistant aging chamber

低温脆性仪
Low temperature brittleness tester

检验设备 Inspection & Test Equipment

低温万能试验机Low temperature universal testing machine

旋转油封性能试验线
Rotary oil seal performance test line

三坐标影像测量仪CMM

数显投影仪Digital Projector

荣誉证书 Certificate of honor

荣誉证书 Certificate of honor

DOMT 多密特
Sealing Technology

谢谢！
Thank you!